DocuSign Envelope ID: 634D6ED5-B89E-4242-A56D-62DF05799B6F

PROJECT REFERENCE NO.	SHEET NO.
17BP.14.R.142	2A-1
ROADWAY DESIGN ENGINEER	PAVEMENT DESIGN ENGINEER
4/6/2017	4/4/2017

DOCUMENT NOT CONSIDERED FINAL UNLESS ALL SIGNATURES COMPLETED

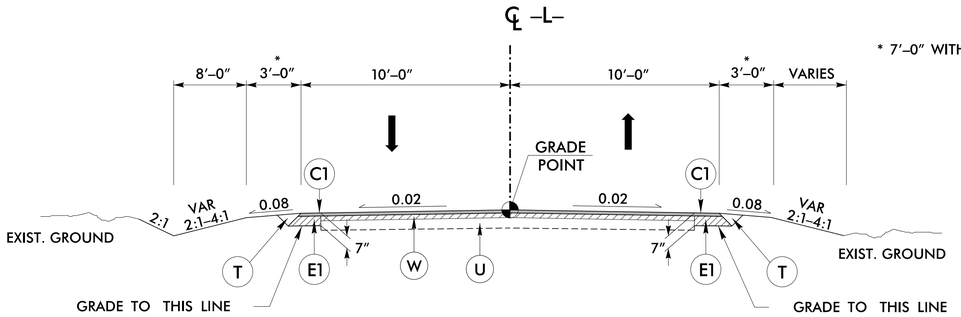

TYPICAL SECTION NO. 1

USE TYPICAL SECTION NO. 1

–L– STA. 10+15.00 TO –L– STA. 11+25.00
–L– STA. 14+40.00 TO –L– STA. 16+00.00

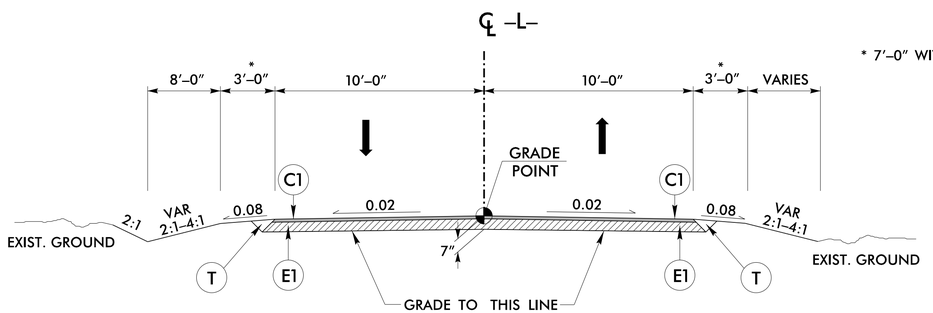

TYPICAL SECTION NO. 2

USE TYPICAL SECTION NO. 2

–L– STA. 11+25.00 TO –L– STA 13+38.54 (BEGIN CULVERT)
–L– STA. 13+56.82 (END CULVERT) TO –L– STA 14+40

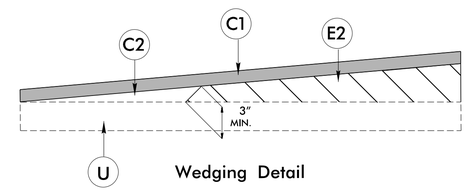

Wedging Detail

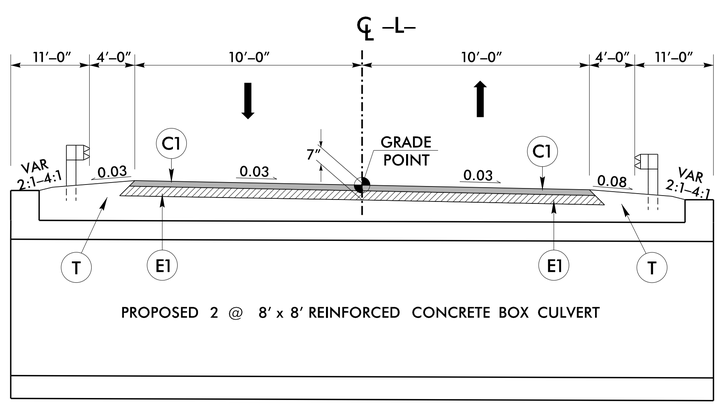

TYPICAL SECTION NO. 3

USE TYPICAL SECTION NO. 3

–L– STA. 13+38.54 (BEGIN CULVERT) TO
–L– STA. 13+56.82 (END CULVERT)

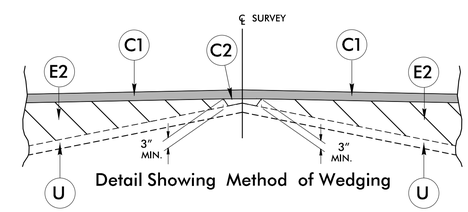

Detail Showing Method of Wedging

NOTES:

1. PAVEMENT EDGE SLOPES ARE 1:1 UNLESS SHOWN OTHERWISE.
2. SEE STD. DWG. 862.01 (SHEET 10 OF 12) FOR CULVERT GUARDRAIL ANCHORAGE DETAILS.
3. SEE CROSS SECTIONS FOR POSSIBLE VARIATIONS TO TYPICAL SECTIONS.

	PAVEMENT SCHEDULE
C1	PROP. APPROX. 3″ ASPHALT CONCRETE SURFACE COURSE, TYPE S9.5B, AT AN AVERAGE RATE OF 168 LBS. PER SQ. YD. IN EACH OF TWO LAYERS.
C2	PROP. VAR. DEPTH ASPHALT CONCRETE SURFACE COURSE, TYPE S9.5B AT AN AVERAGE RATE OF 112 LBS. PER SQ. YD. PER 1″ DEPTH. TO BE PLACED IN LAYERS NOT TO EXCEED 1½″ IN DEPTH.
C3	PROP. APPROX. 1½″ ASPHALT CONCRETE SURFACE COURSE, TYPE S9.5B, AT AN AVERAGE RATE OF 168 LBS. PER SQ. YD.
E1	PROP. APPROX. 4″ ASPHALT CONCRETE BASE COURSE, TYPE B25.0B, AT AN AVERAGE RATE OF 456 LBS. PER SQ. YD.
E2	PROP. VAR. DEPTH ASPHALT CONCRETE BASE COURSE, TYPE B25.0B, AT AN AVERAGE RATE OF 114 LBS. PER SQ. YD. PER 1″ DEPTH. TO BE PLACED IN LAYERS NOT LESS THAN 3″ IN DEPTH OR GREATER THAN 5½″ IN DEPTH.
T	EARTH MATERIAL
U	EXISTING PAVEMENT
W	PROPOSED WEDGING (SEE APPROPRIATE DETAILS)

6/2/99
3/28/2017
S:\Transportation\31235-13 14AI Polk 189\Roadway\Proj\bd5114a1_rdy_typ.dgn
USER: jdavis